ASUS ZC554KL B

RF Hardware Trouble Shooting Guide

ASUS Inspiring Innovation · Persistent Perfection

ASUS ZC554KL trouble shooting guide V1 -RF

1.RF Areas

The need to calibrate the range is as follows: “phone2G/3G/4G”、“MCP”

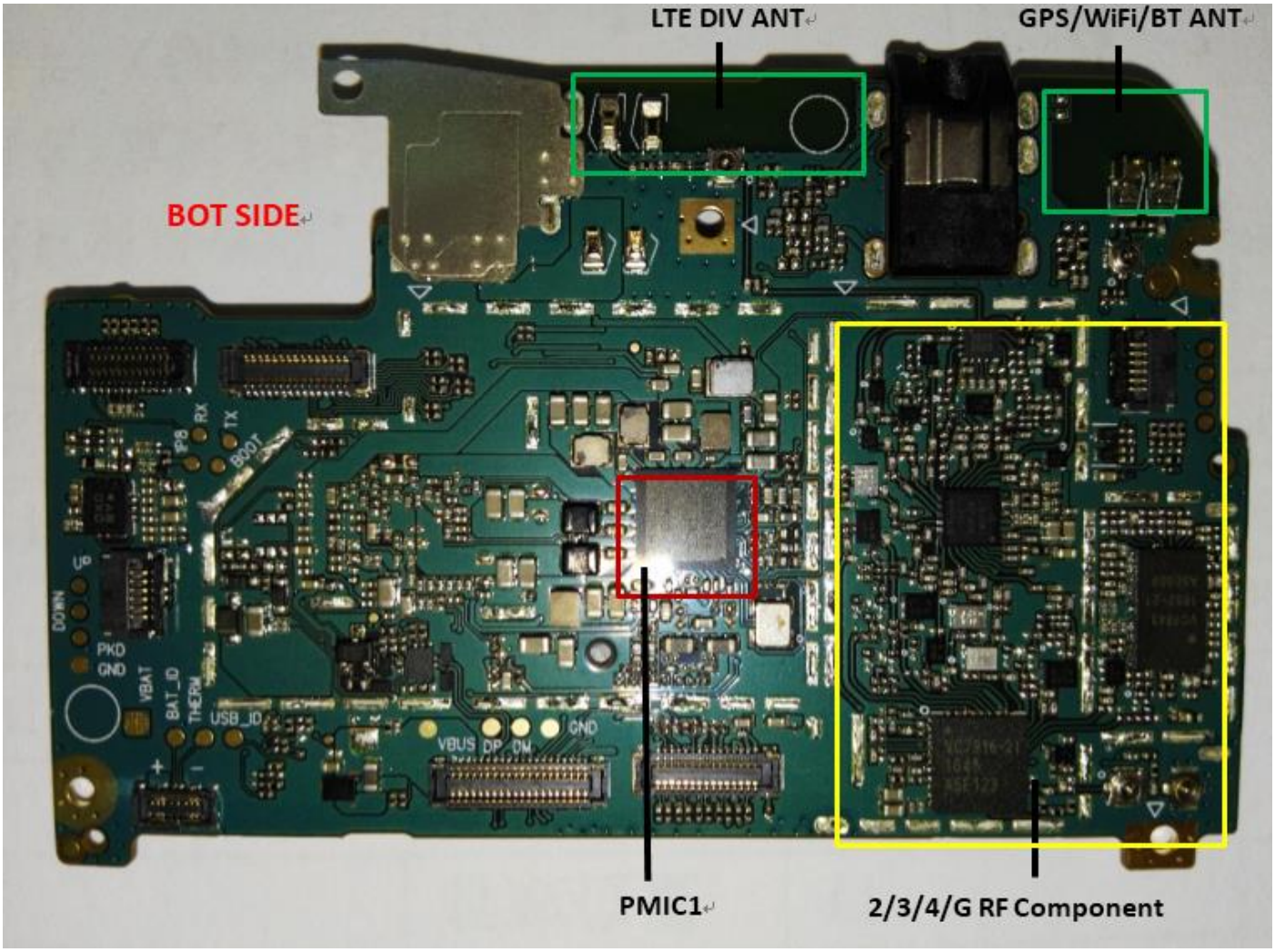

`

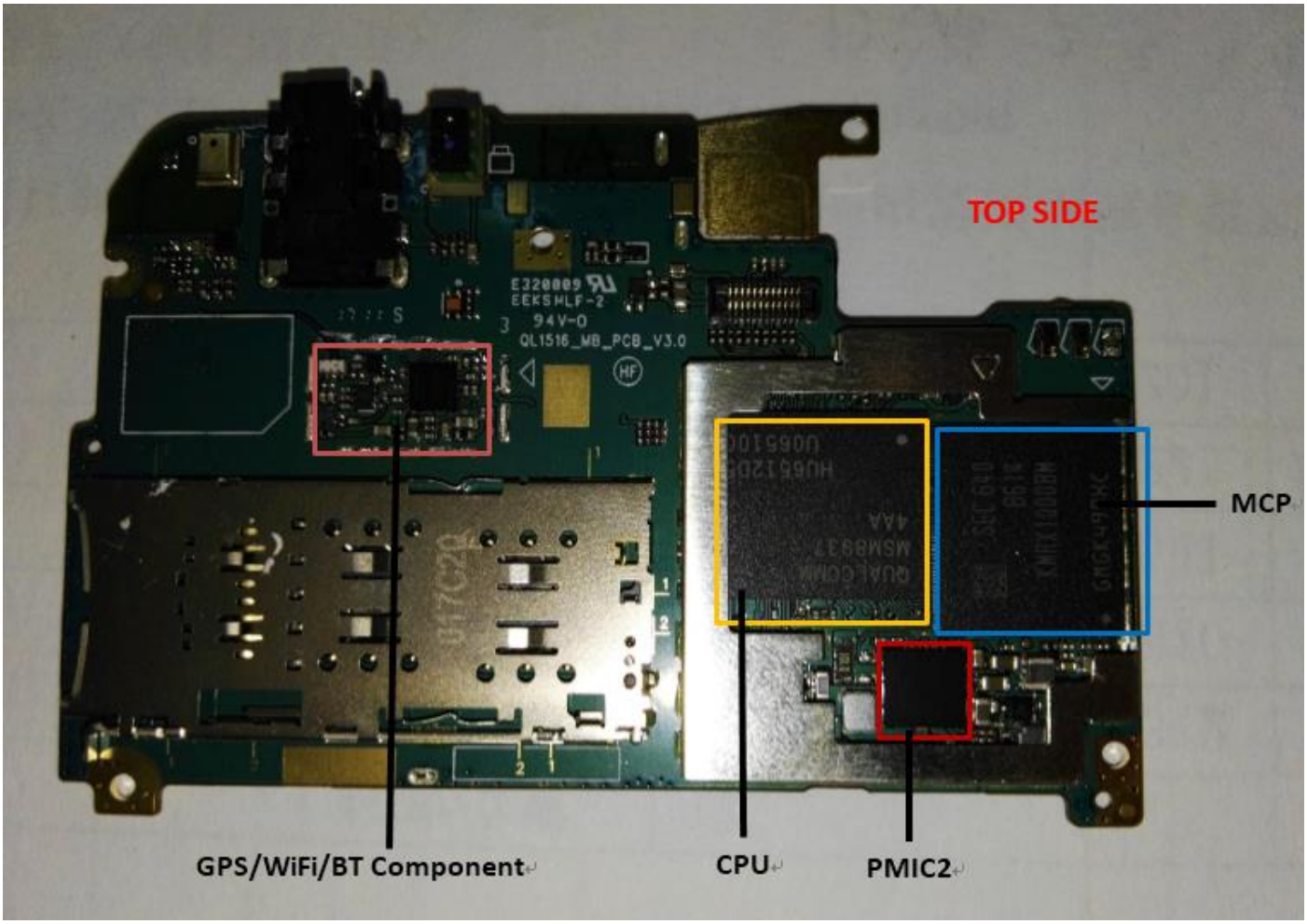

***Supported 2G/3G/4GBands for ZC554KL:**

2.GSM(2G)/WCDMA(3G)/LTE(4G)/CDMA RF

2.1 Circuit diagram

TW (TW/JP/HK/SG/PH + US/BR/CO/PE/CL)
2G (EDGE/GPRS/GSM) :850MHz/900MHz/1800MHz/1900MHz (5/8/3/2)
3G (WCDMA) :2100MHz(1)/1900MHz(2)/1700MHz(4)/900MHz(8)/850MHz(5/6/19) (1/2/4/8/ 5_6_19)
4G (FDD-LTE):2100MHz(1)/1900MHz(2)/1800MHz(3)/1700MHz(4)/850MHz(5)/2600MHz(7)/900MHz(8)/700MHz(12/17/(18)/800MHz(19)/(26)/700MHz(28) (1/2/3/4/26_5_18_19 /7/8/12_17/28)
4G (TDD-LTE:): 2600MHz(38)/2545 ~2655MHz(41) (38_41)

`

Main ANT Tuner:

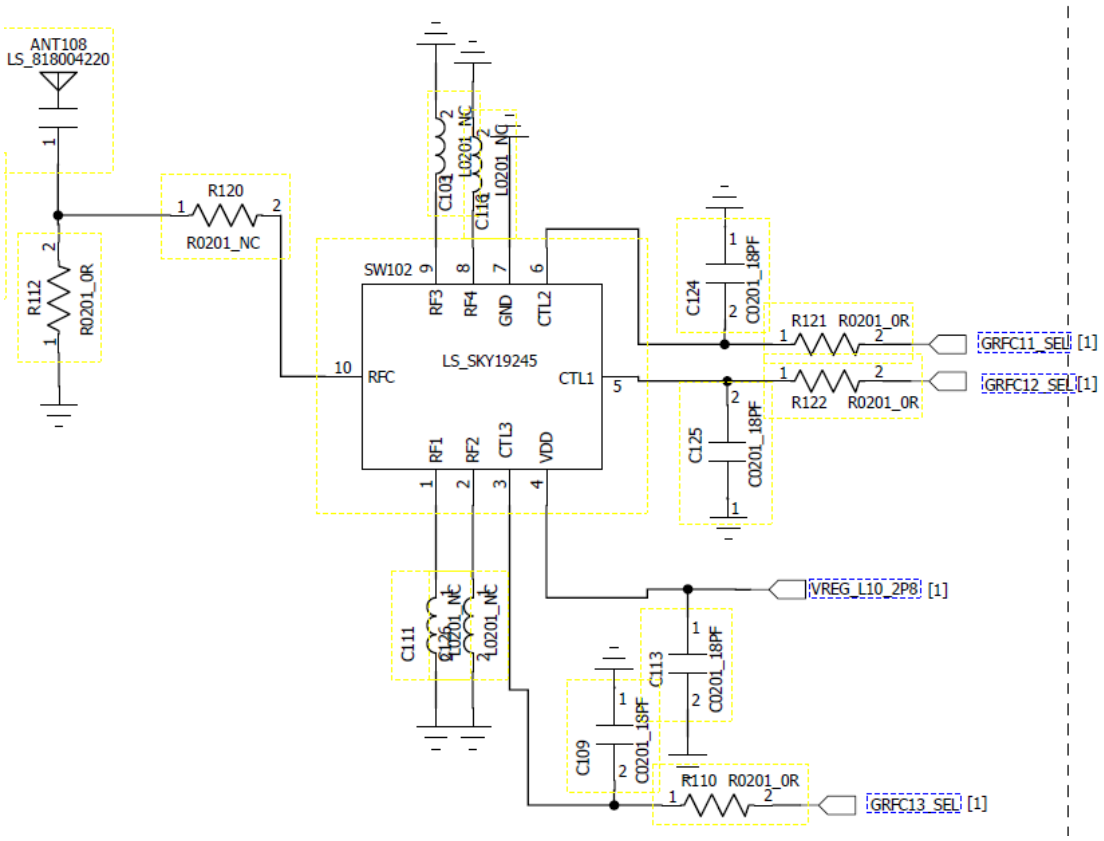

Main ANT:

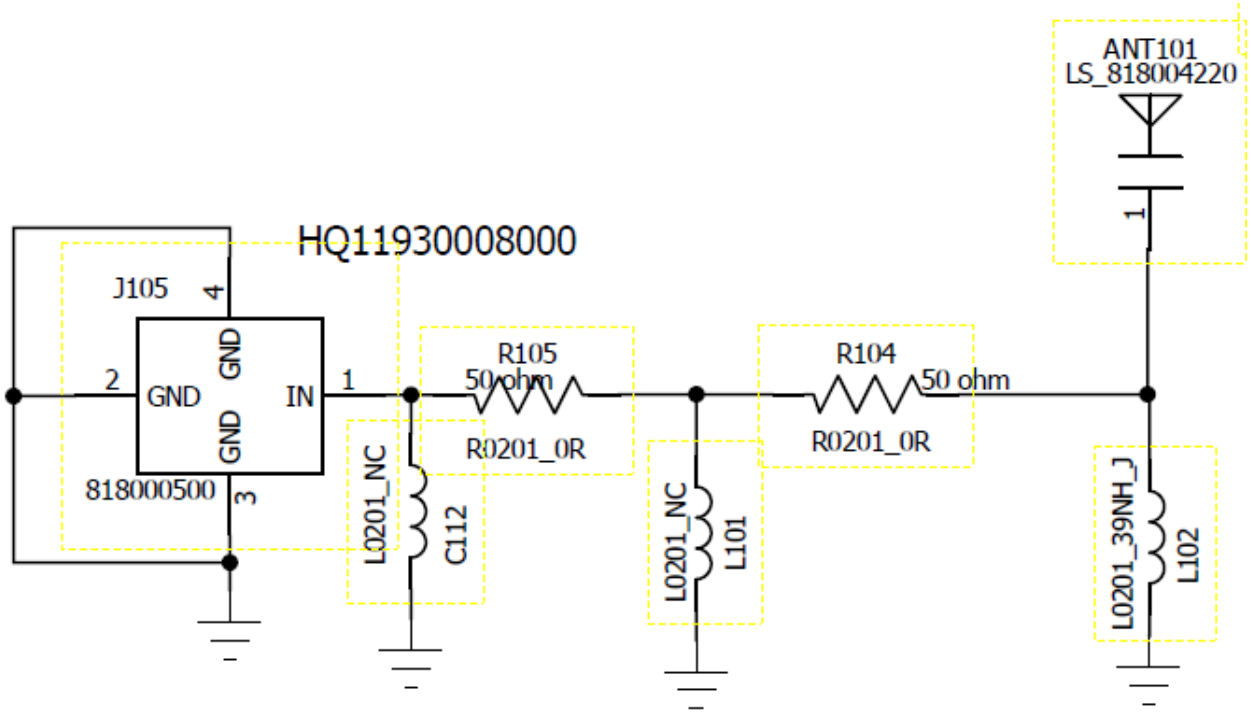

RF Main SET 2/3/4G:

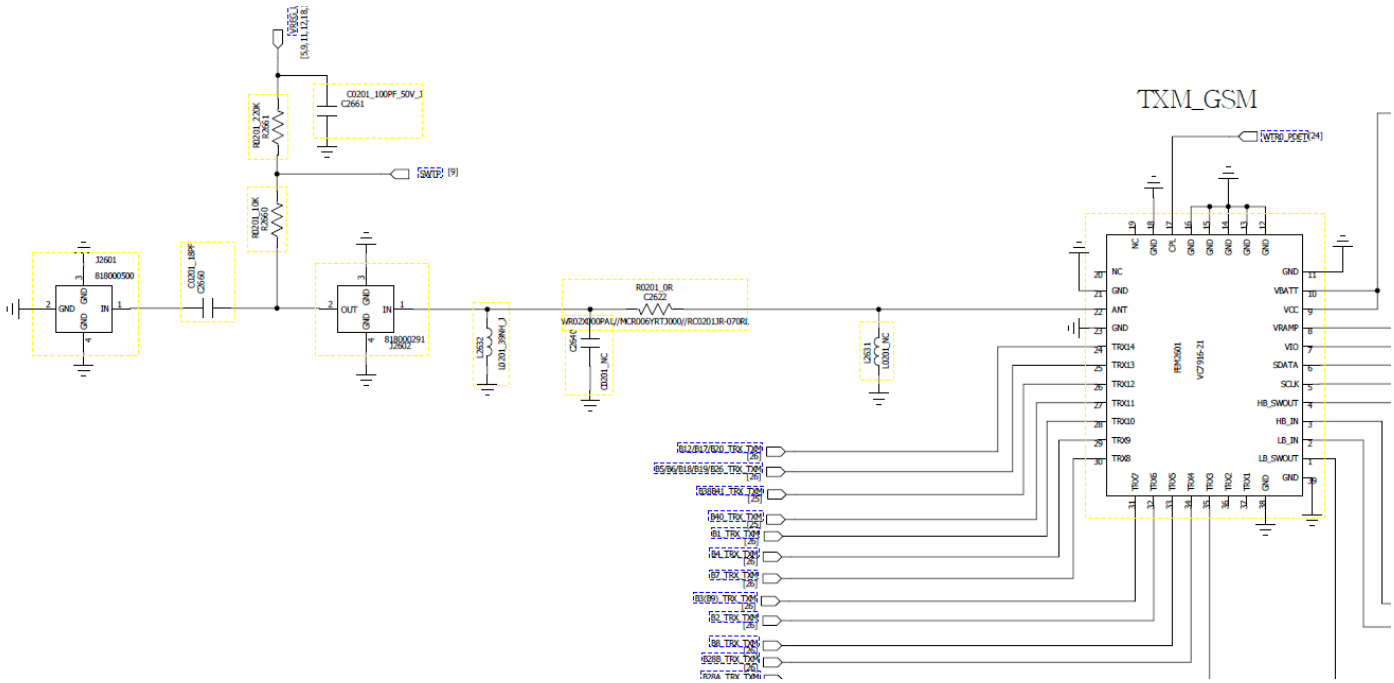

GSM/TD-SCDMA PA+SP16T RF Switch:

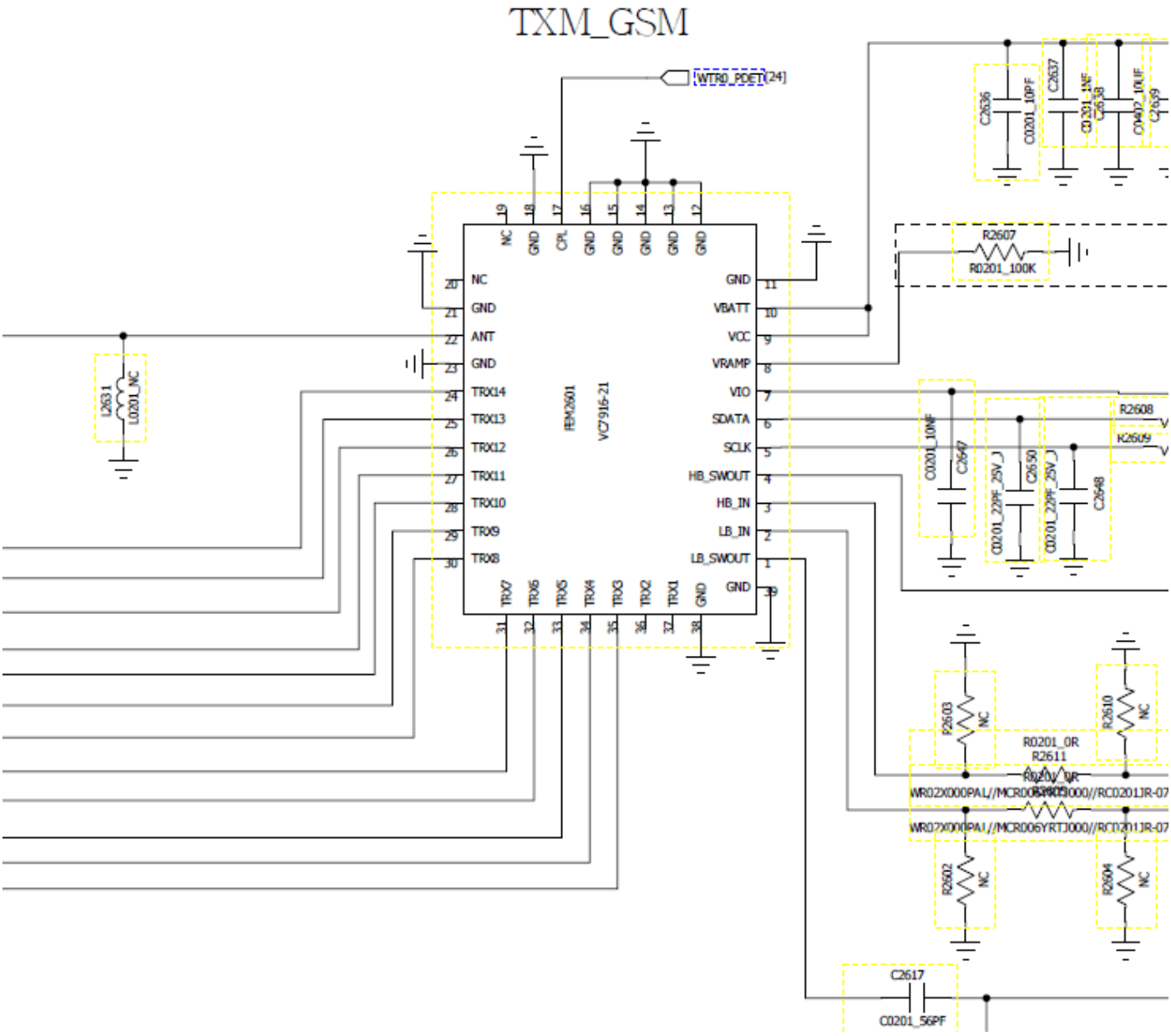
TXM_GSM
WTR0_PDET[24]
NC
GND
CPL
GND
GND
GND
GND
GND
NC
GND
ANT
GND
TRX14
TRX13
TRX12
TRX11
TRX10
TRX9
TRX8
GND
VBATT
VCC
VRAMP
VIO
SDATA
SCLK
HB_SWOUT
HB_IN
LB_IN
LB_SWOUT
GND
TRX7
TRX6
TRX5
TRX4
TRX3
TRX2
TRX1
GND
FEM2601
VC7916-21
L2631
L0201_NC
C2636
C0201_10PF
C2637
C0201_1NF
C2638
C0402_10UF
C2639
R2607
R0201_100K
C0201_10NF
C2647
C0201_22PF_25V_J
C2650
C0201_22PF_25V_J
C2648
R2608
R2609
R2603
NC
R2610
NC
R0201_0R
R2611
R0201_0R
R2605
WR02X000PAL//MCR006YRTJ000//RC0201JR-07
WR07X000PAL//MCR006YRTJ000//RC0201JR-07
R2602
NC
R2604
NC
C2617
C0201_56PF

WCDMA+LTE PA:

`

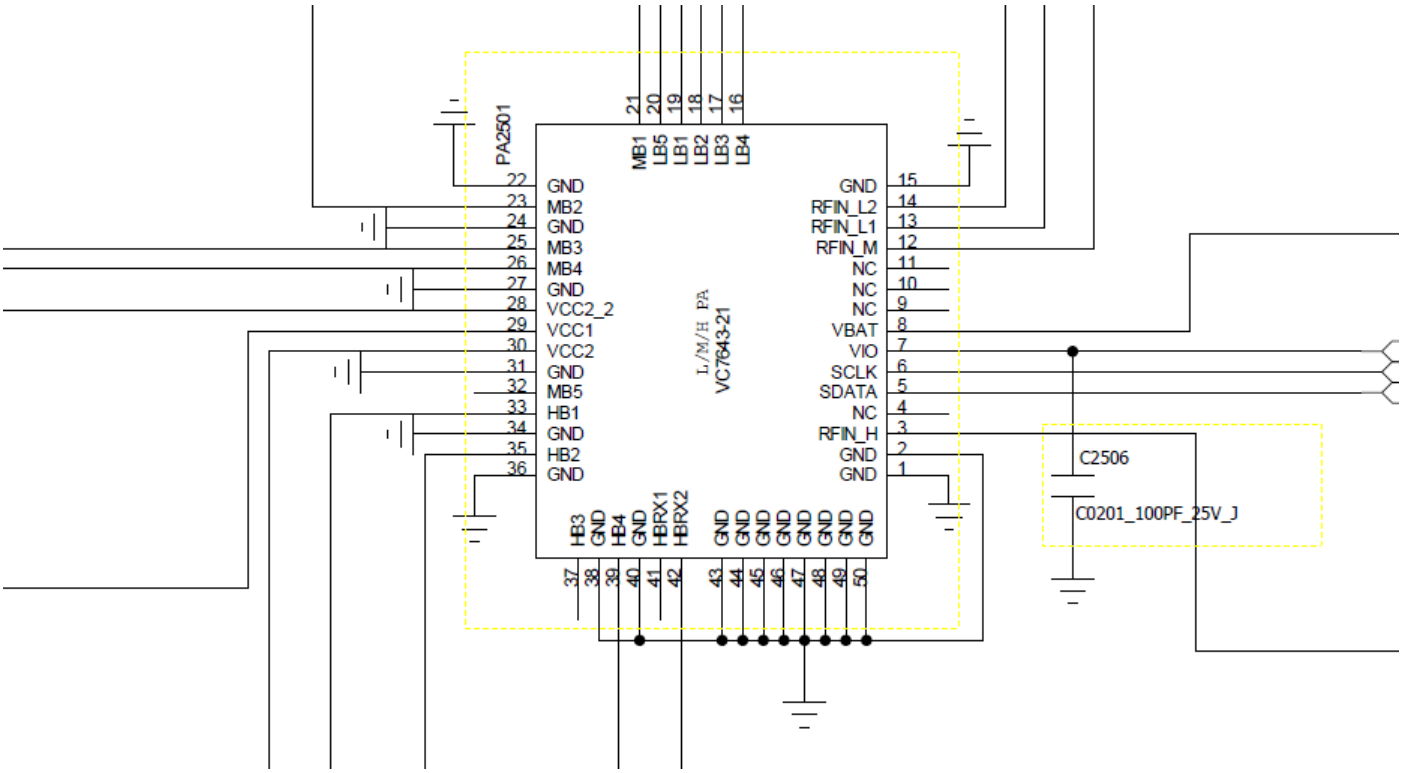

B38/41 TRX SAW：

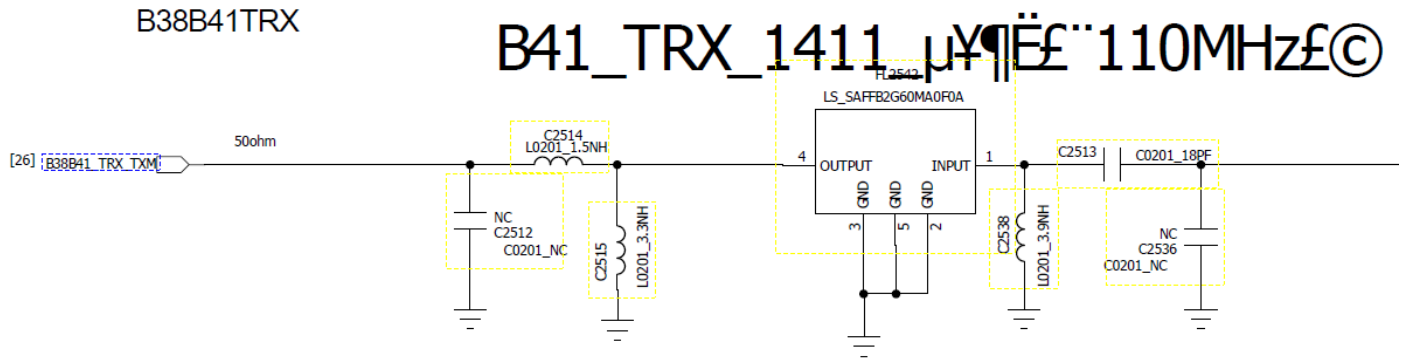

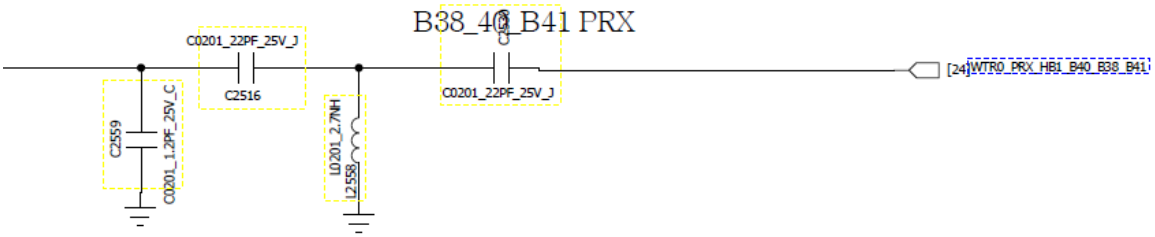

B1 Duplexer:

`

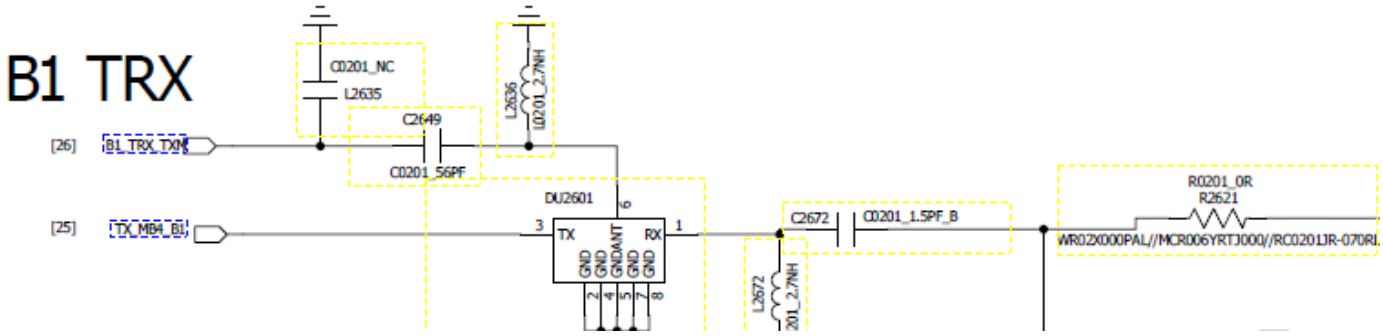

B2 Duplexer:

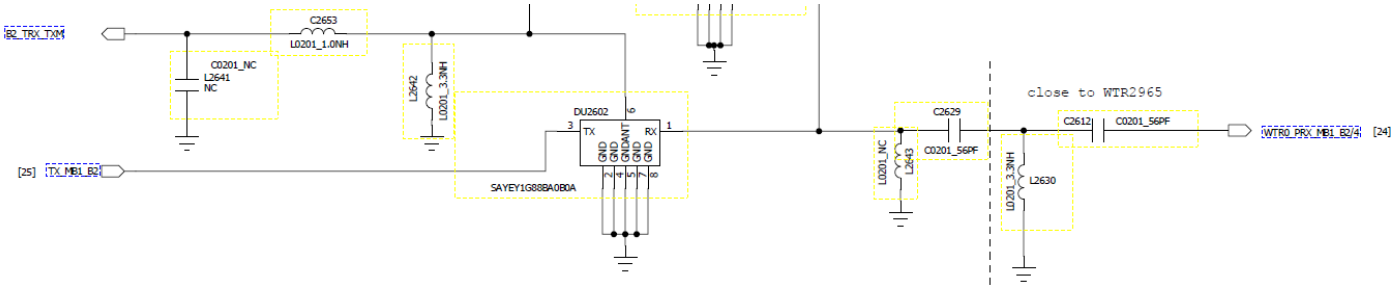

B3 Duplexer:

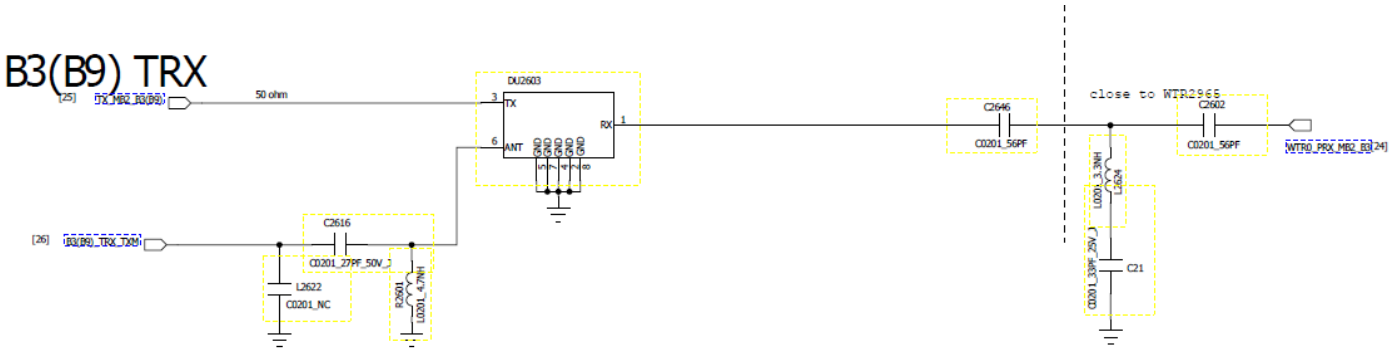

B4 Duplexer:

`

B4 TRX

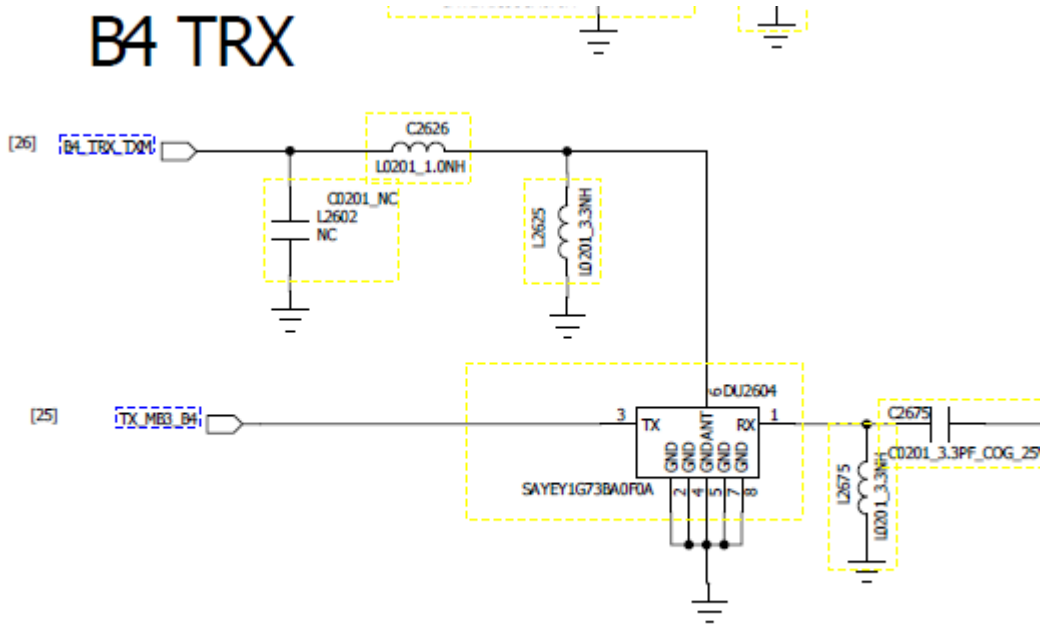

B5/6/18/19/26 Duplexer:

B5/B6/B18/B19_TRX

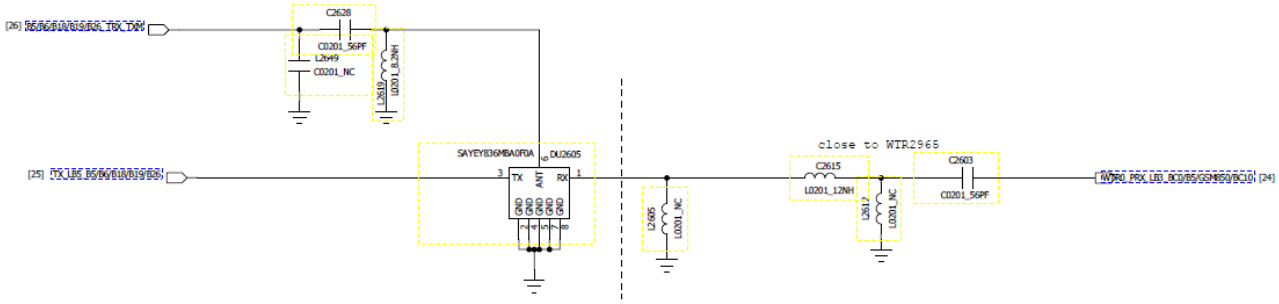

B7 Duplexer:

B7 TRX

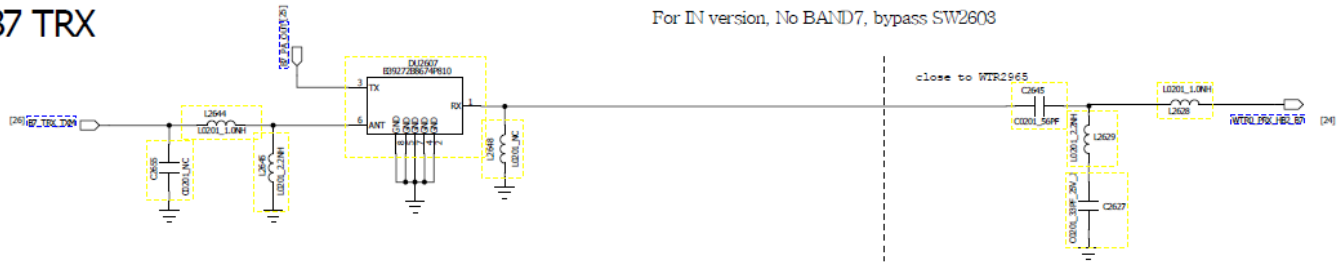

B8 Duplexer:

`

B8 TRX

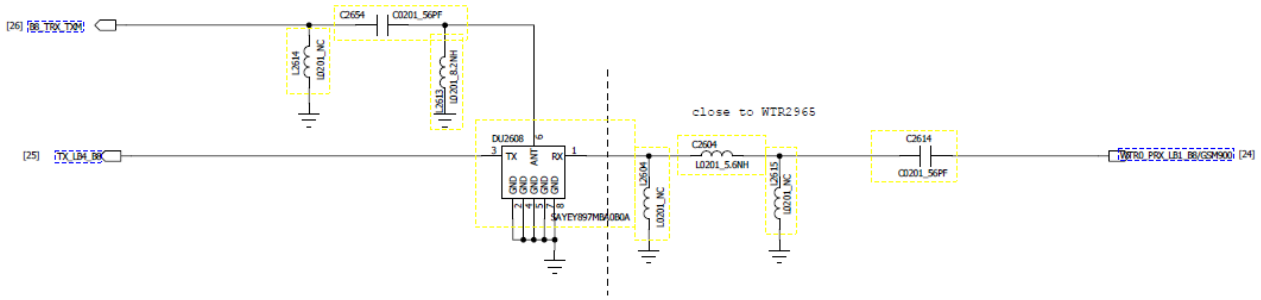

B12/17 Duplexer:

B12/B17/B20 TRX

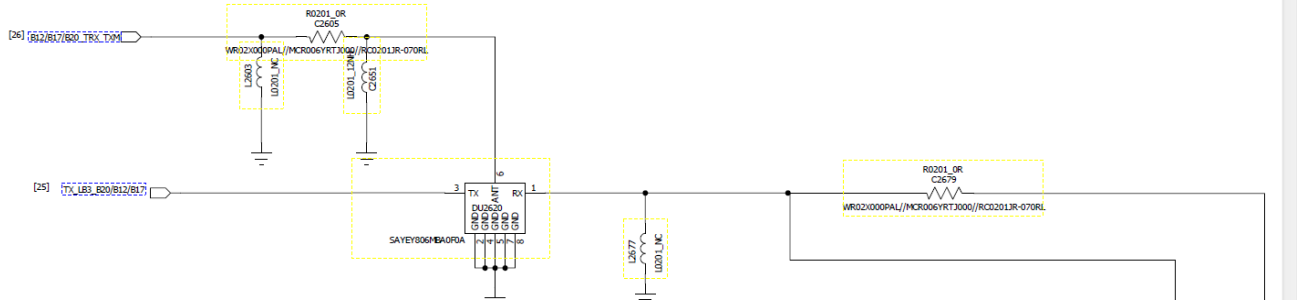

B28A+B28B Duplexer:

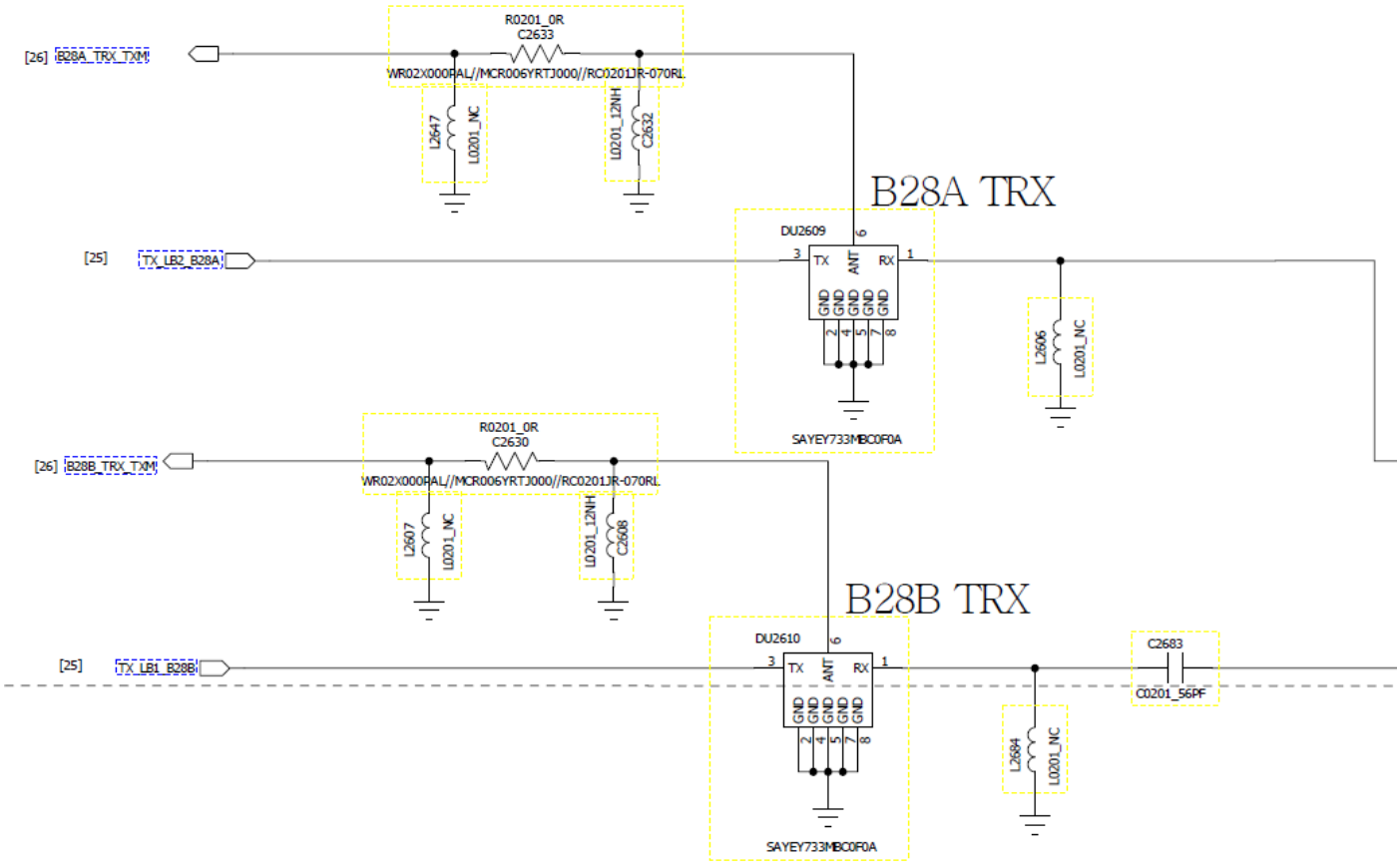

B12_17/B28A+B28B PRX Switch:

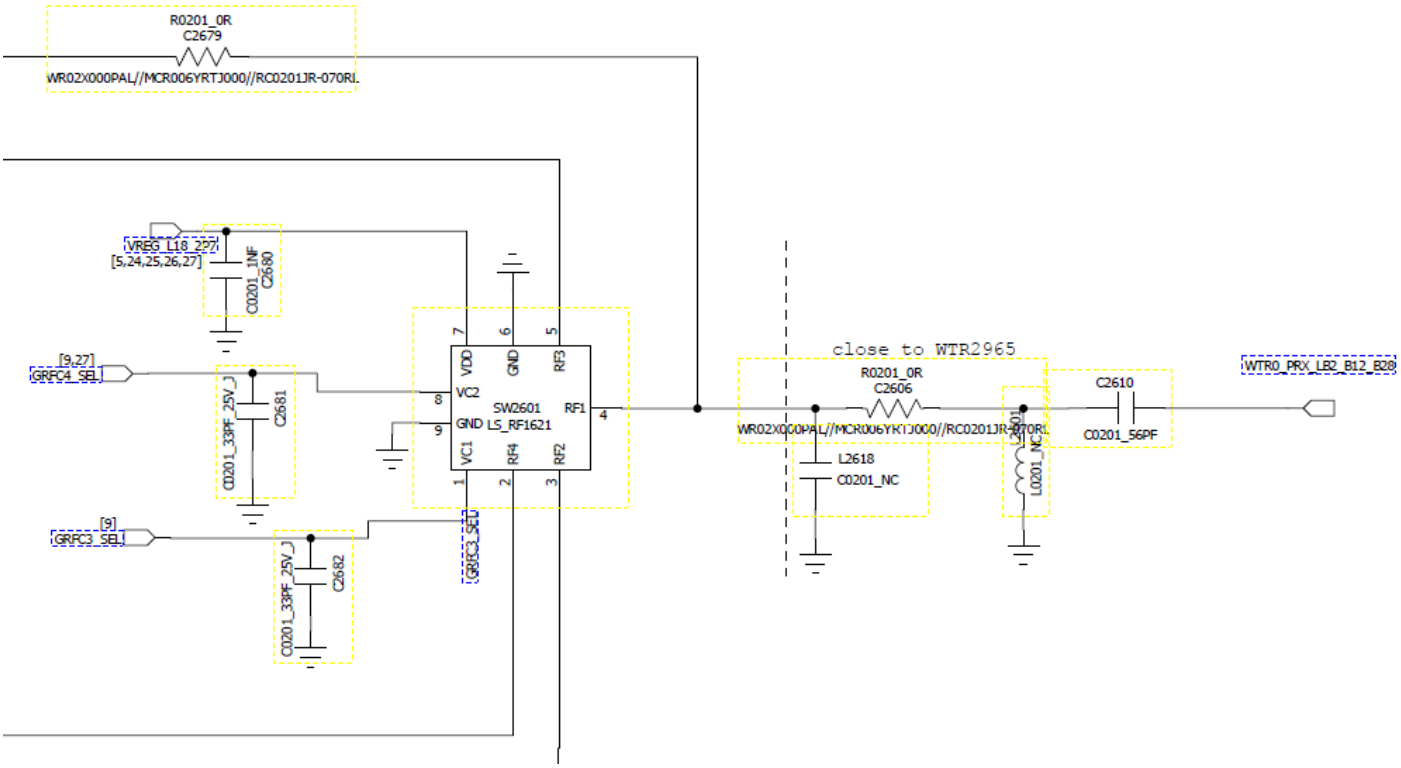

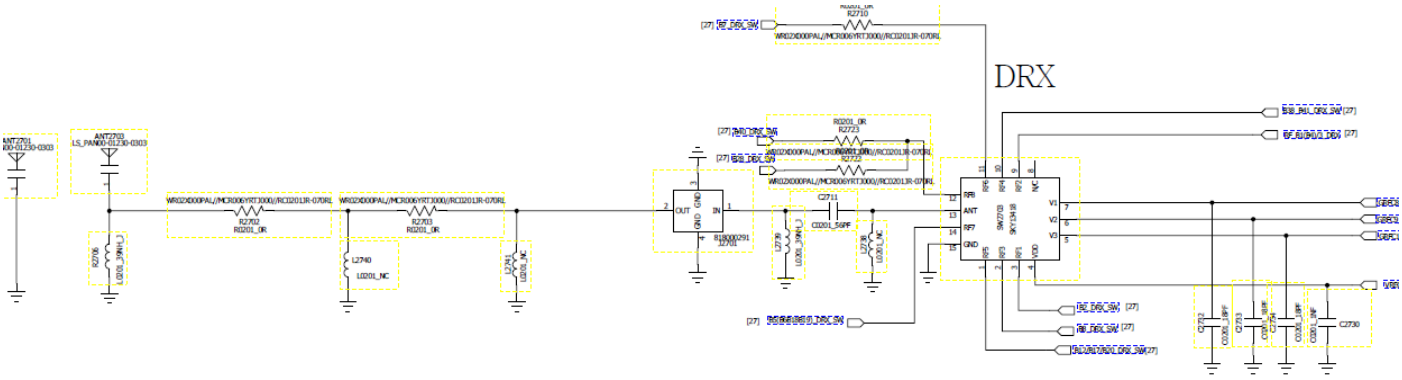

DRX RF SET:

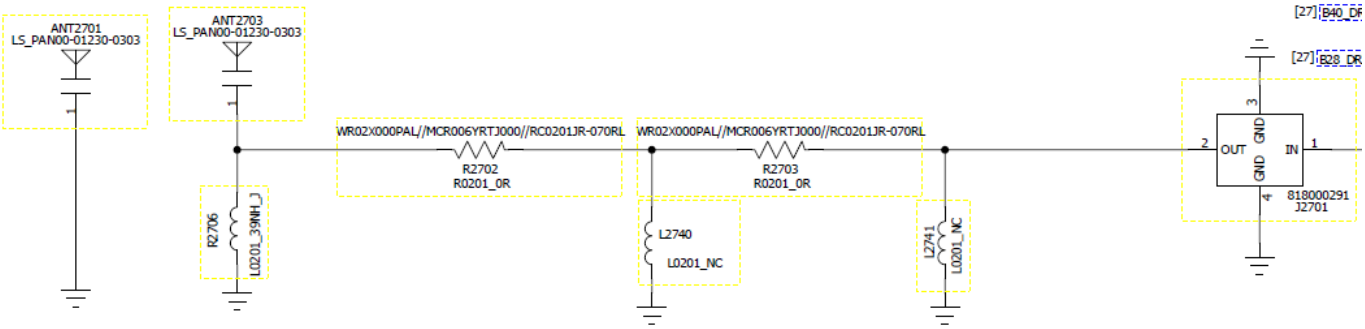

DFX RF Switch:

`

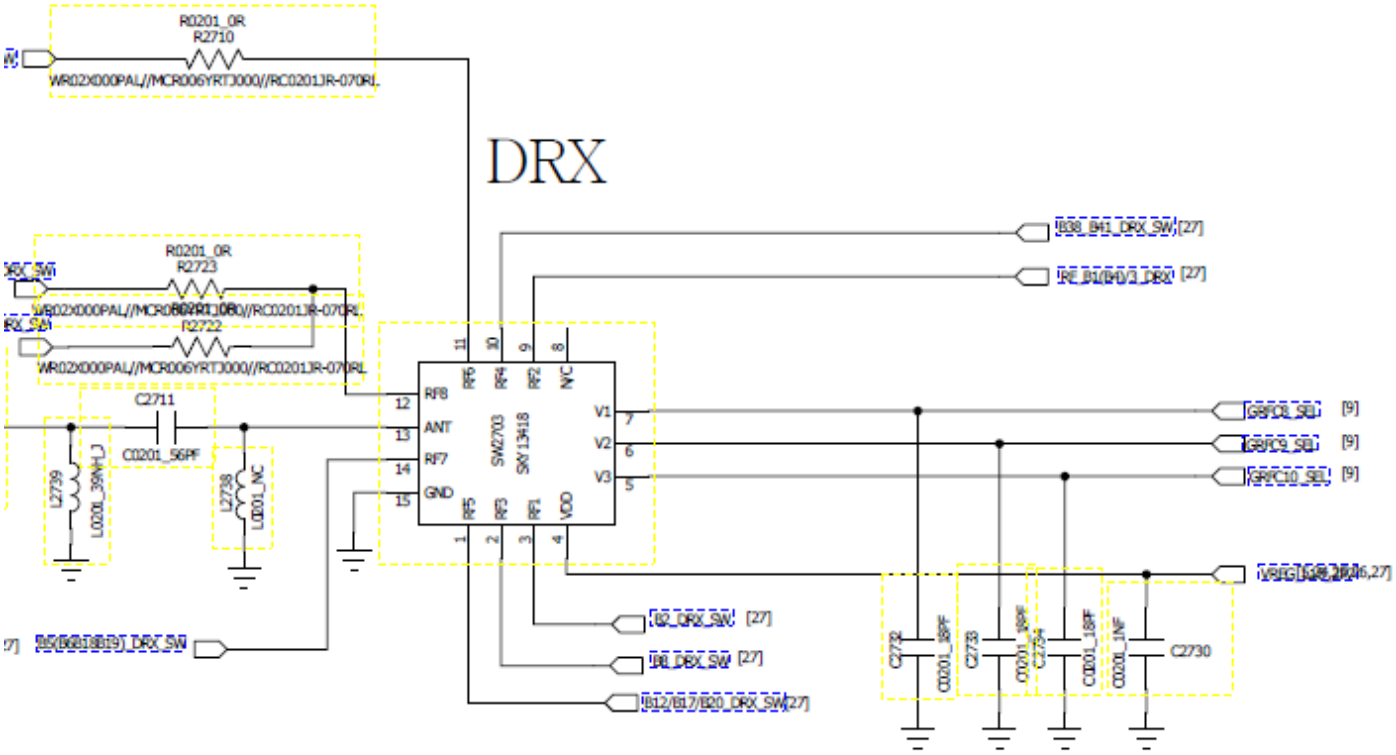

B1_4+B3 DRX SAW:

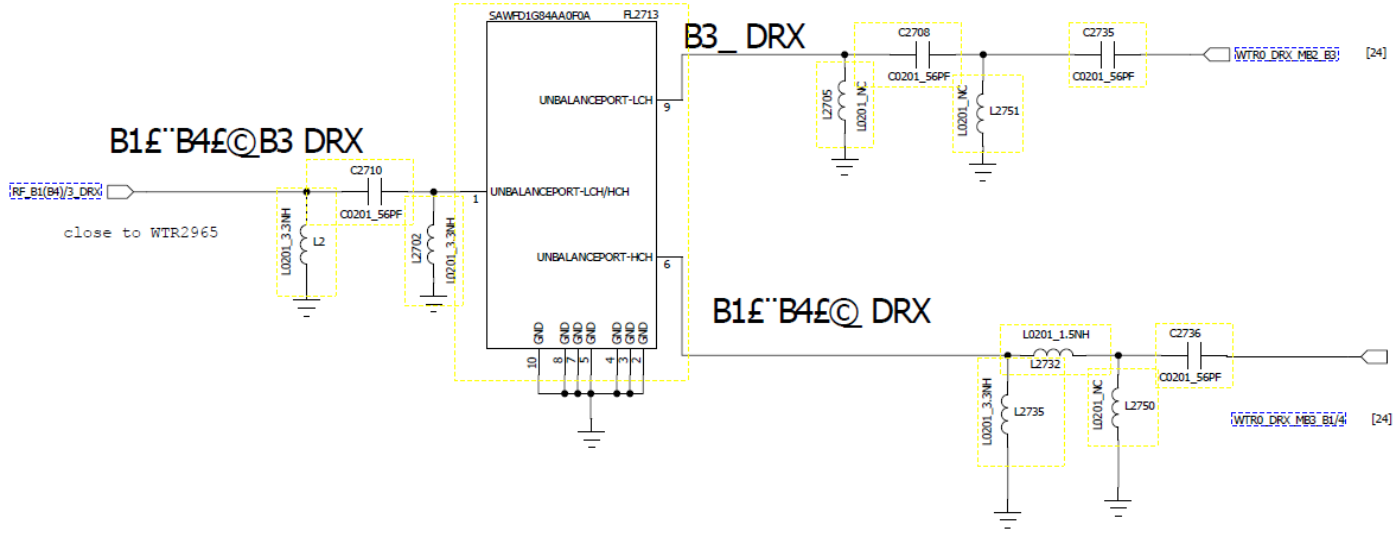

B2 DRX SAW:

`

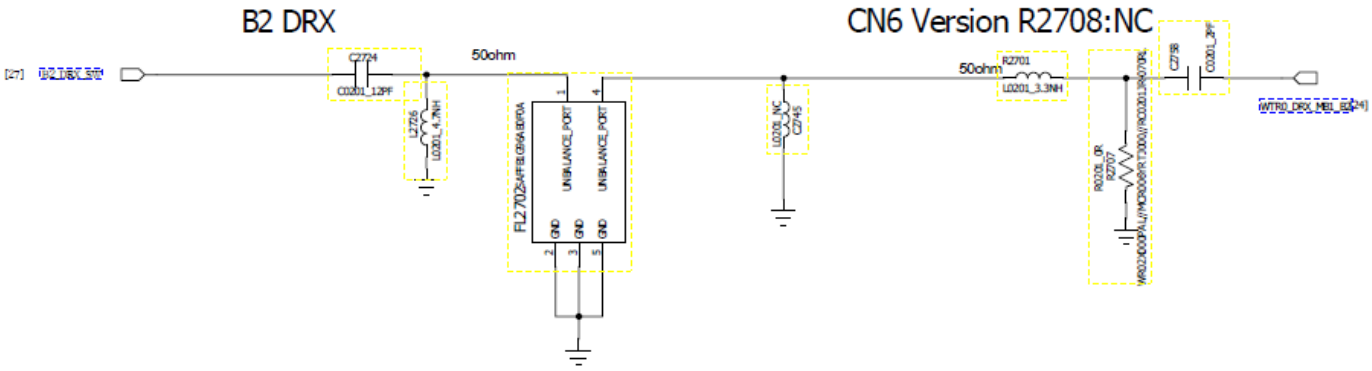

B5/6/18/19/26 DRX SAW:

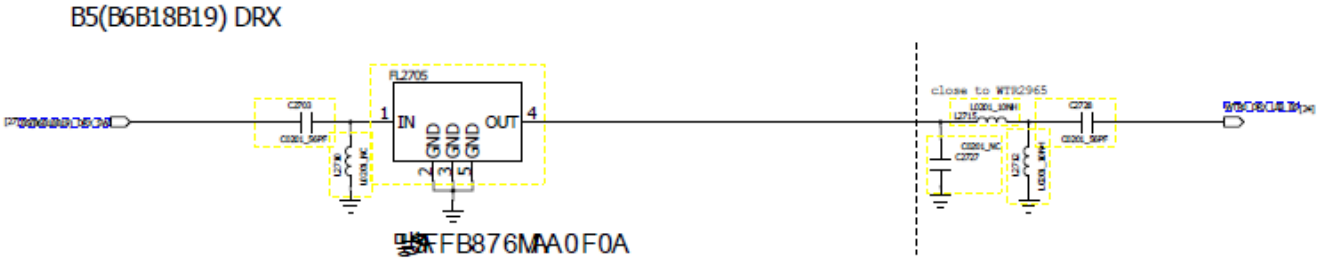

B8 DRX SAW:

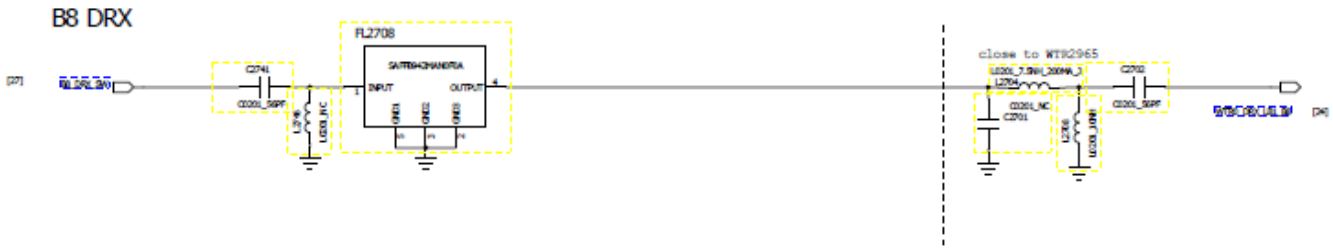

B12/17 DRX SAW:

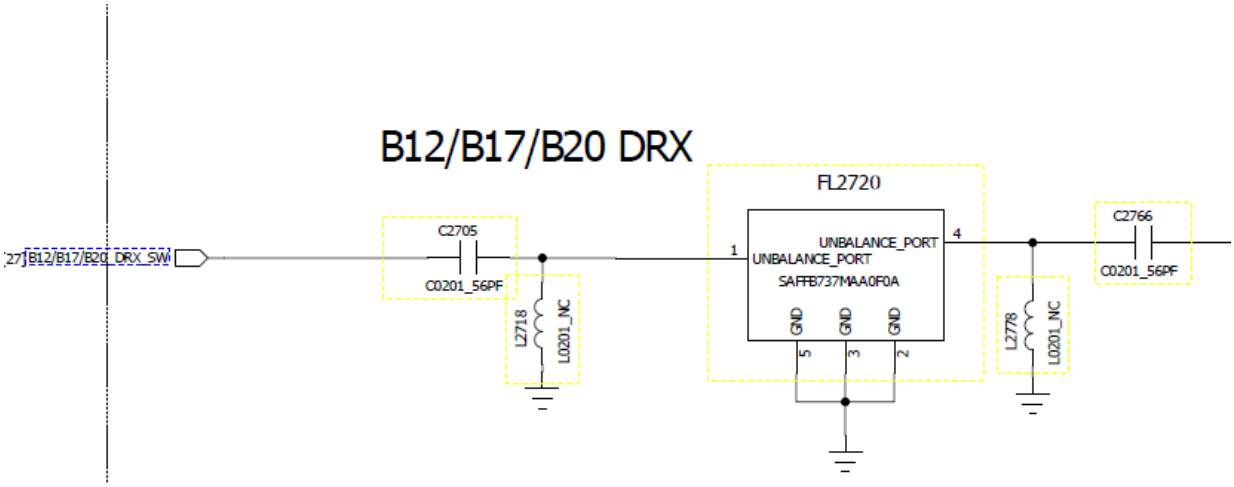

B28 DRX SAW:

`

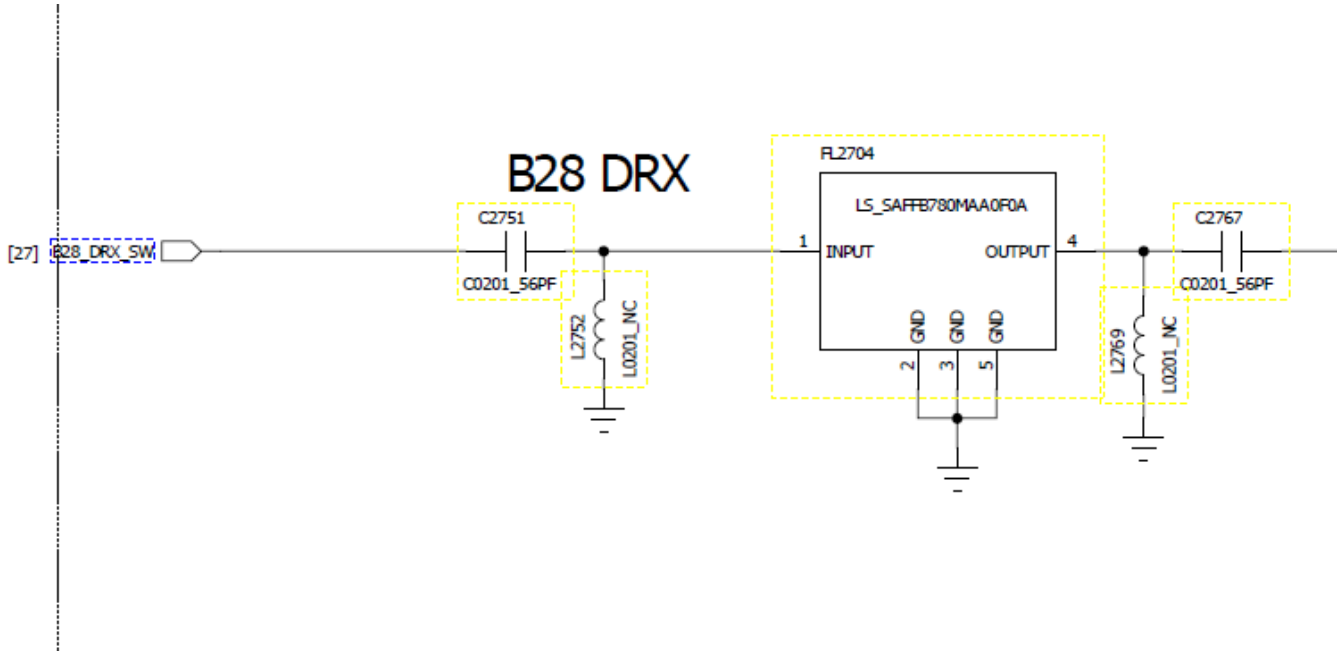

B12_17/B28 DRX Switch:

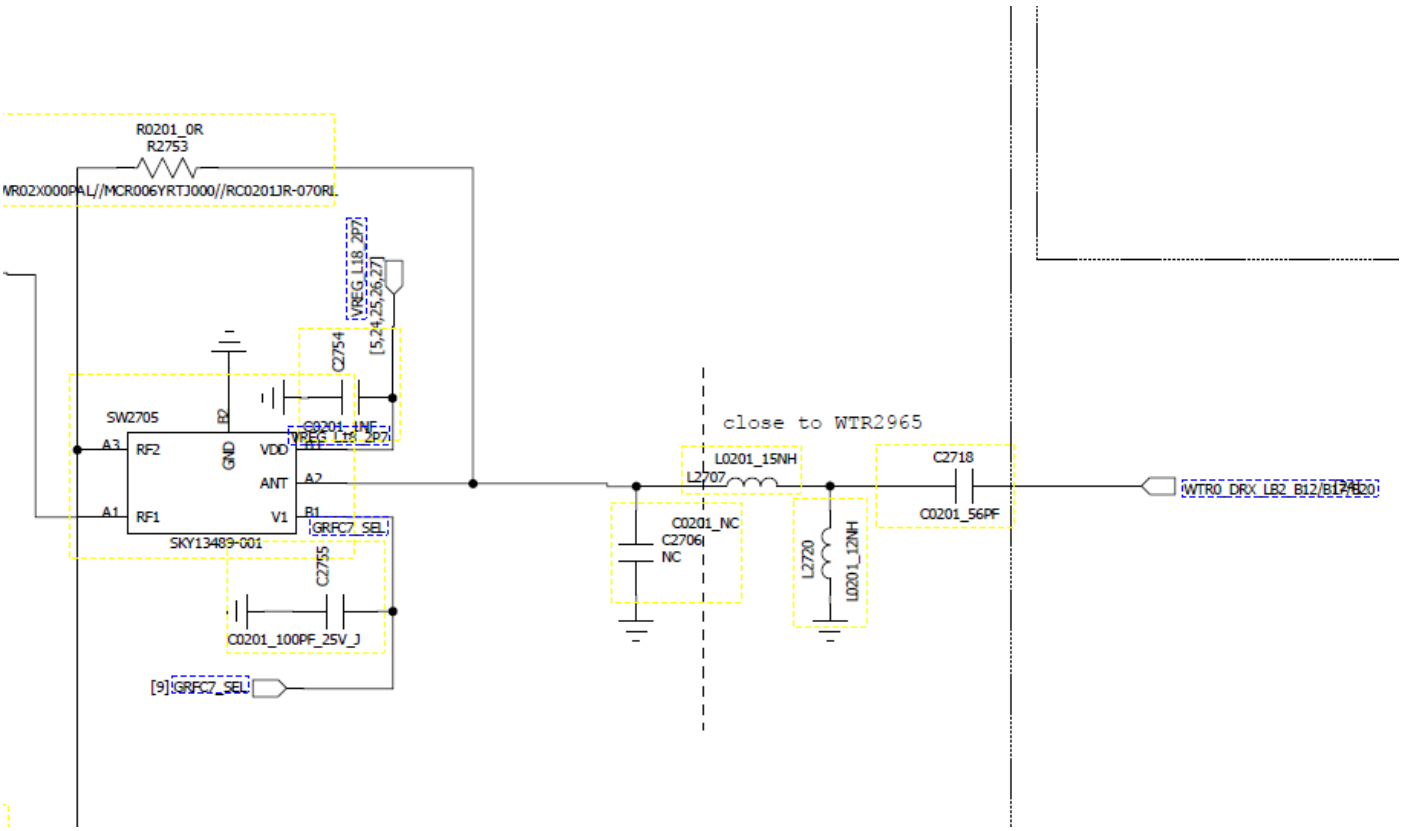

B38_B41 DRX SAW:

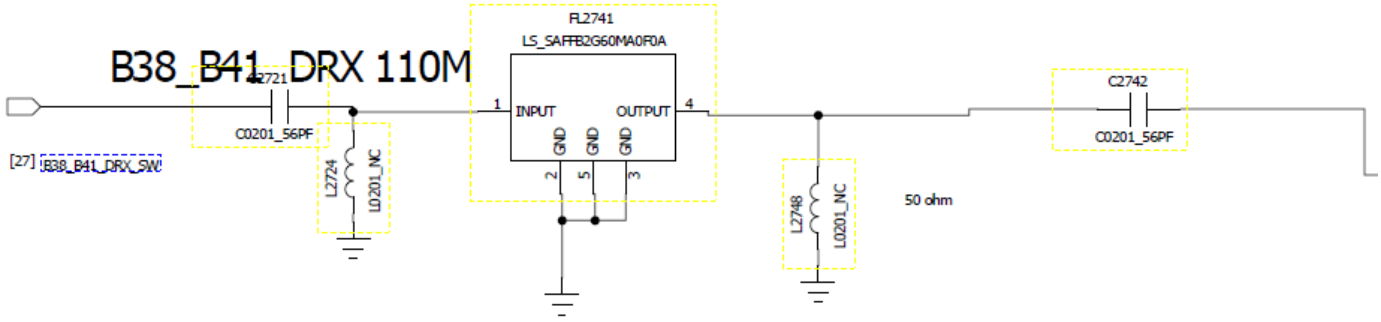

B7 DRX SAW:

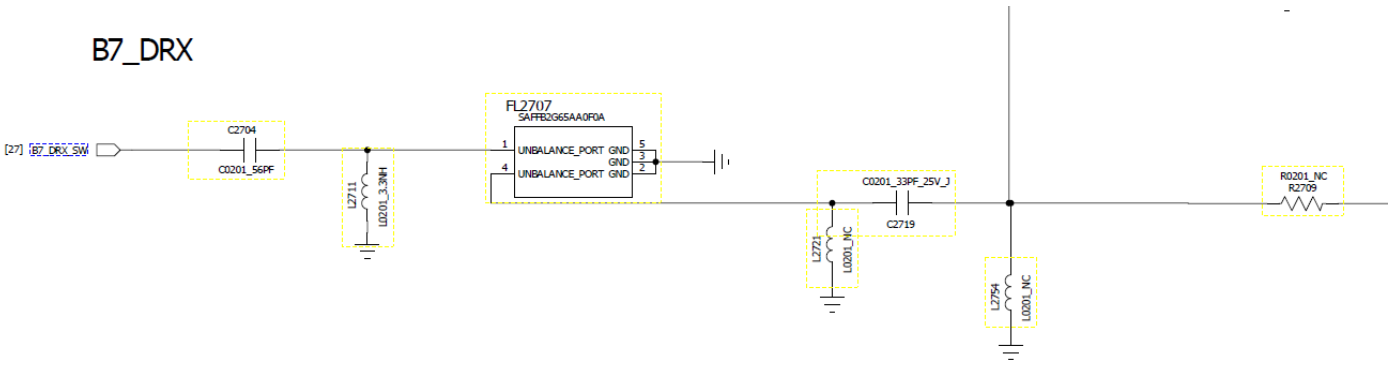

B38_41+B7 DRX Switch:

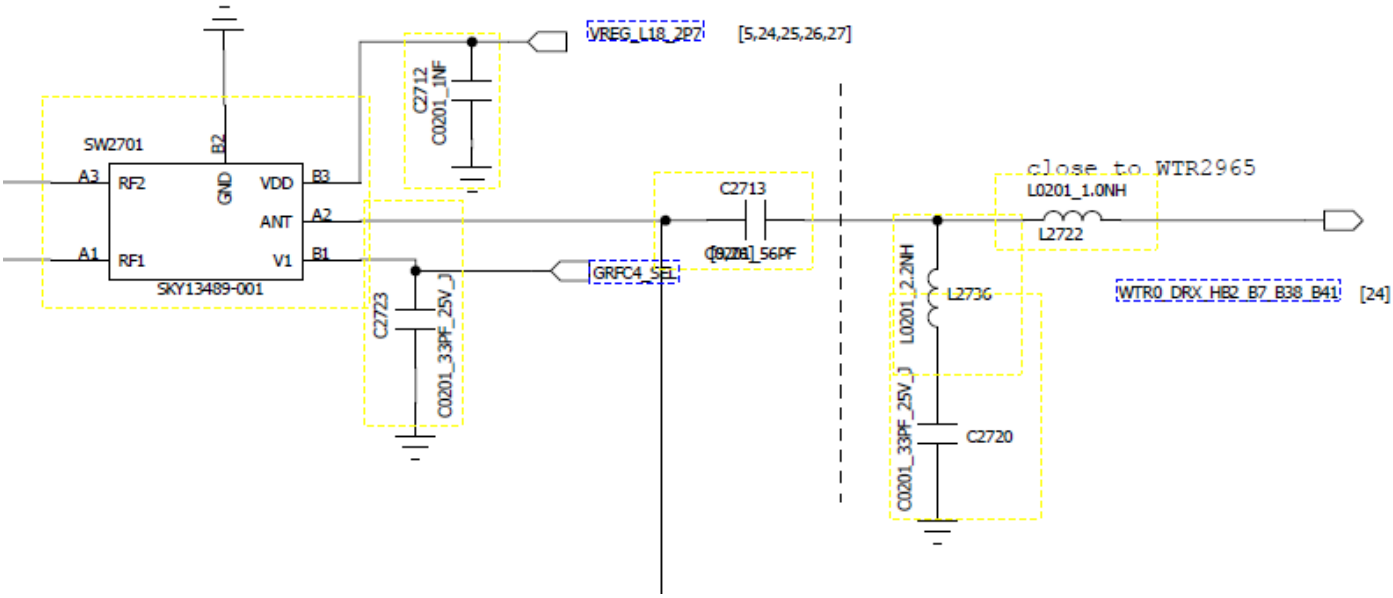

2.2RF Block Diagram:2G/3G/4G(GSM&CDMA&WCDMA&LTE)System

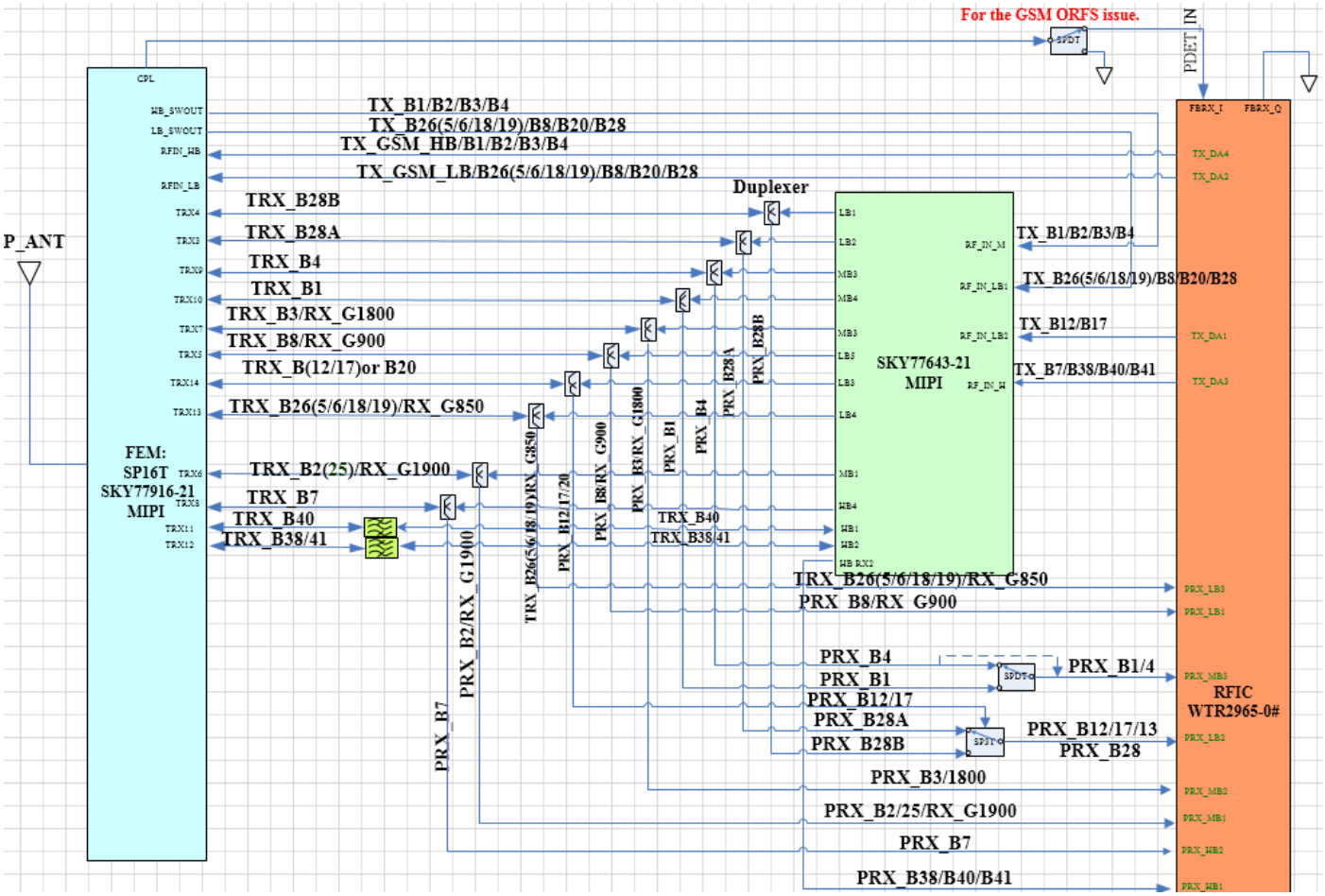

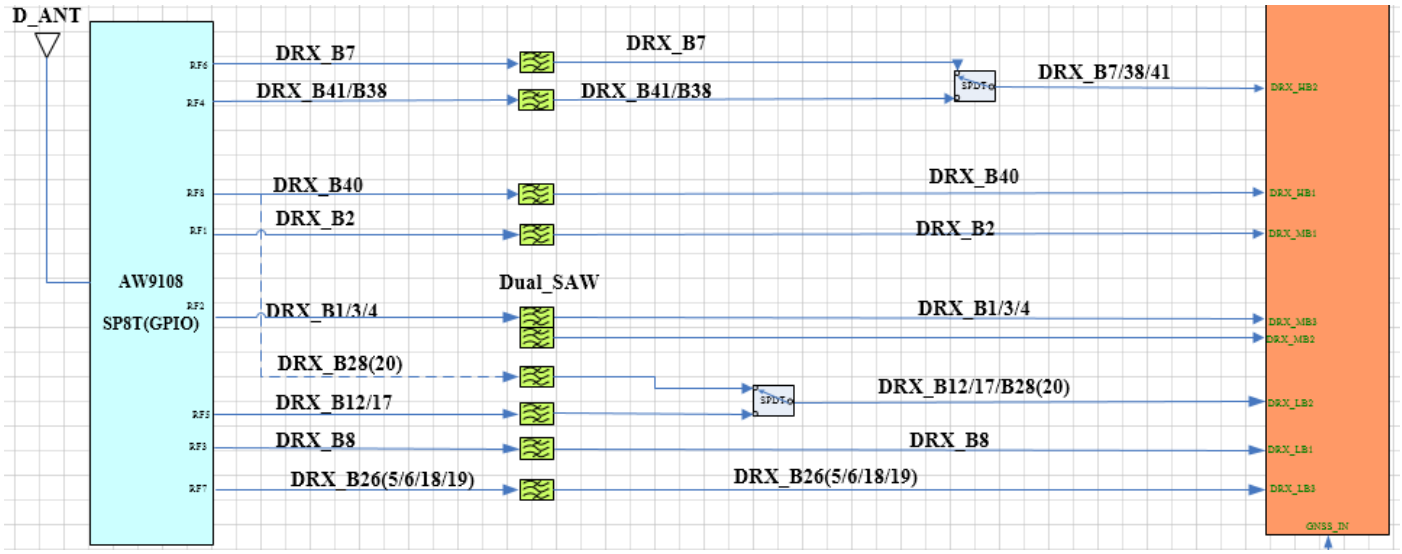

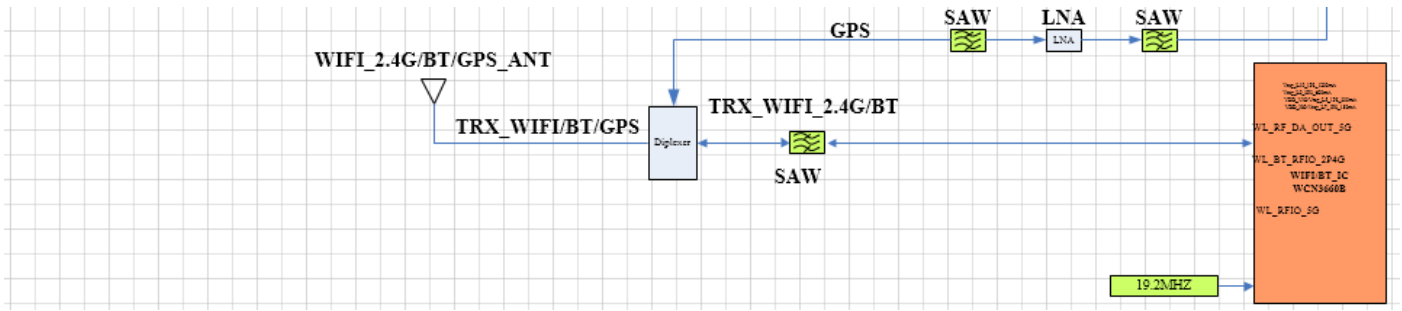

`

2.3 Key Components

Electronic components description and circuit location code:

编号	位号	物料描述
1	PA2501	射频放大器模组_LTE/TDD/FDD/MMPA
2	FEM2601	射频放大器_GSM/TD
3	U2401	射频收发器_CDMA/GSM/WCDMA/TD-SCDMA/TDD/FDD-TLE
4	DU2604	电磁干扰双向带阻滤波器_B4_1814 单端
5	DU2603	电磁干扰双向阻带滤波器_B3_单端
6	DU2607	电磁干扰双向阻带滤波器_B7_单端
7	FL2602	NC
8	DU2601	电磁干扰双向阻带滤波器_band1_单端 1814
9	DU2608	电磁干扰双向阻带滤波器_band5_单端 1814
10	DU2610	电磁干扰双向阻带滤波器_B28B_单端_1814
11	DU2609	电磁干扰双向阻带滤波器_B28A_单端_1814
12	SW2601	SP3T
13	DU2620	电磁干扰双向阻带滤波器_B12_单端
14	DU2605	双工器_B8_单端_1814
15	FL2705	声表面滤波器_B8_RX
16	FL2720	声表面滤波器_B12_DRX/单端
17	FL2704	声表面滤波器_full band28_DRX / SAW Single Filter for Band28
18	FL2702	GSM1900/RX_SAW_1109
19	FL2713	声表面滤波器_B1/B3_RX
20	FL2707	声表面滤波器_B7/单端_1109
21	FL2741	声表滤波器_Band41_110M_TRX
22	FL2740	NC
23	SW2703	射频开关_SP8T
24	SW2701	射频开关_SPDT
25	SW2605	射频开关_SPDT
26	FL2540	NC
27	FL2542	声表滤波器_Band41_110M_TRX
28	SW2705	射频开关_SPDT
29	FL2708	滤波器_B26(B5)_单端 1109
30	SW2401	射频开关_SPDT

`

Schematic diagram on the motherboard:

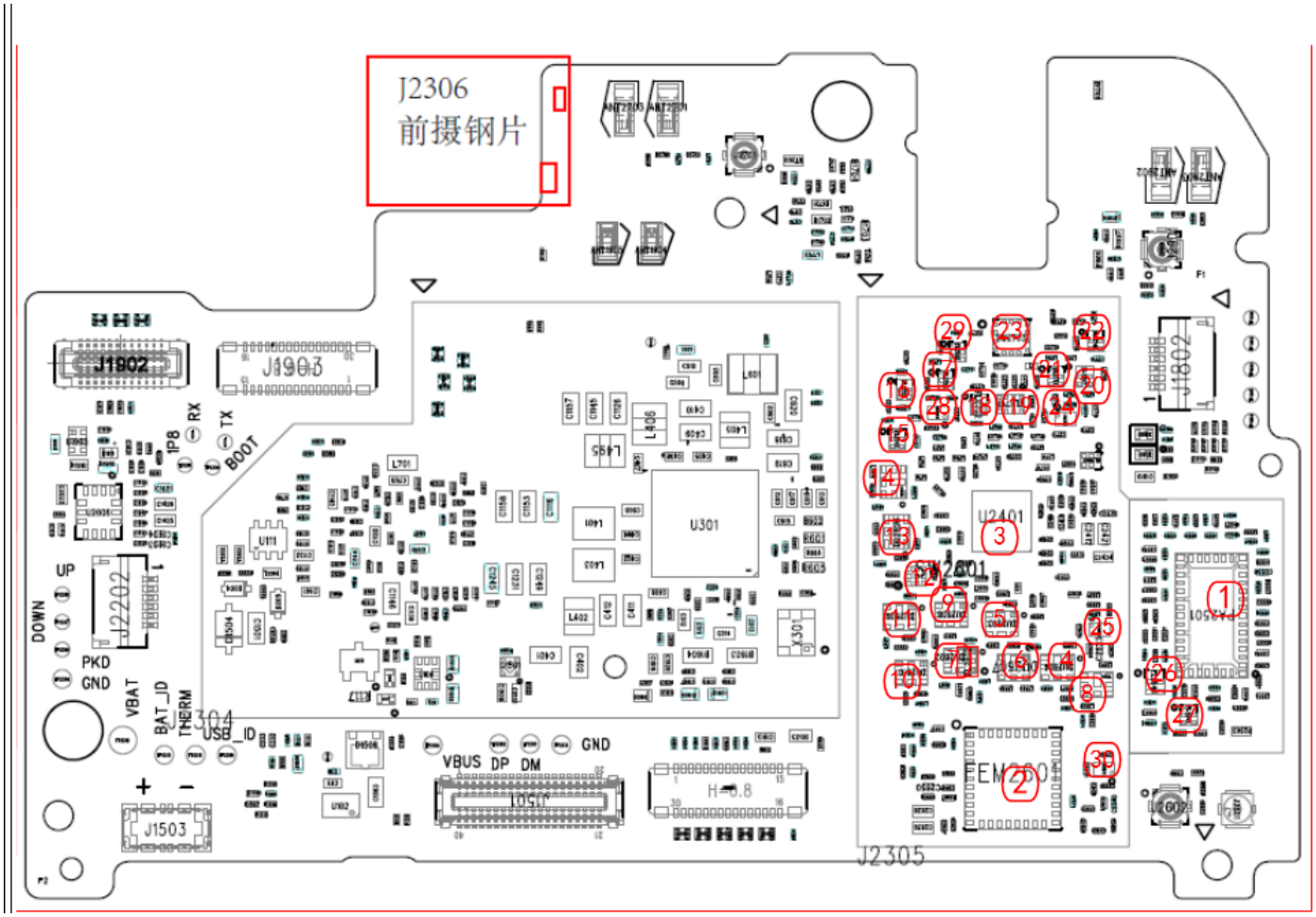

3.WIFI/GPS/BT

3.1Circuit diagram

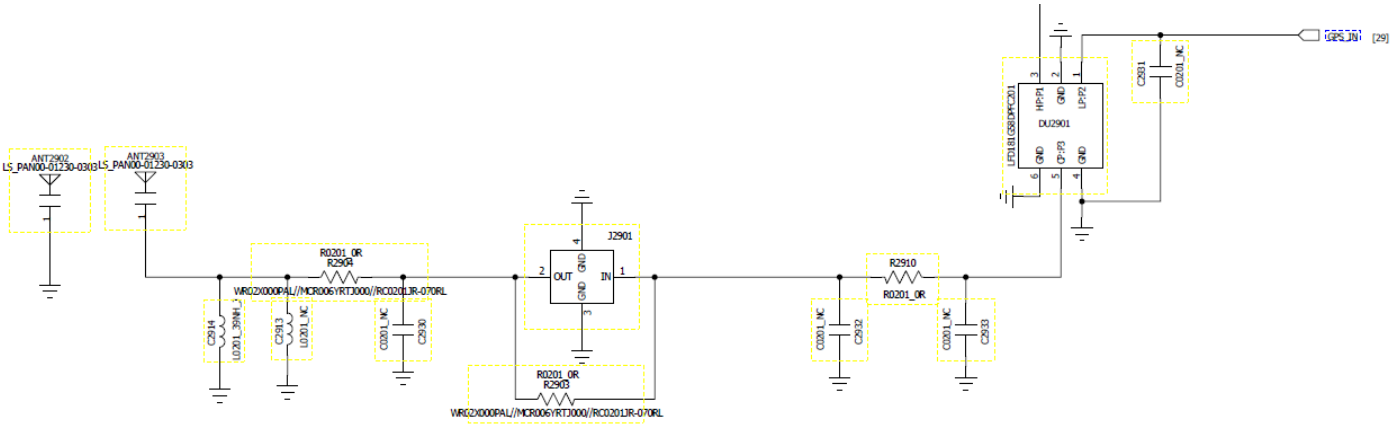

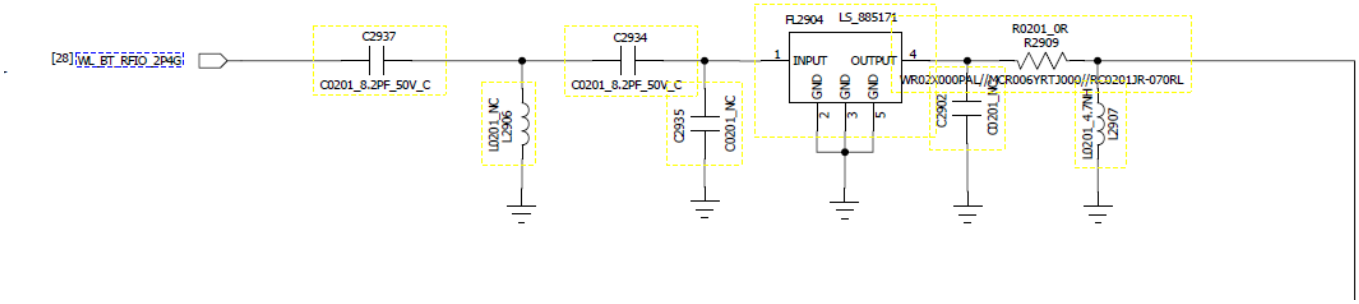
[28] WL_BT_RFIO_2P4G
C2937
C0201_8.2PF_50V_C
C2934
C0201_8.2PF_50V_C
FL2904
LS_885171
INPUT
OUTPUT
GND
R0201_0R
R2909
WR02X000PAL//MCR006YRTJ000//RC0201JR-070RL
L0201_NC
L2906
C2935
C0201_NC
C2902
C0201_NC
L0201_4.7NH
L2907

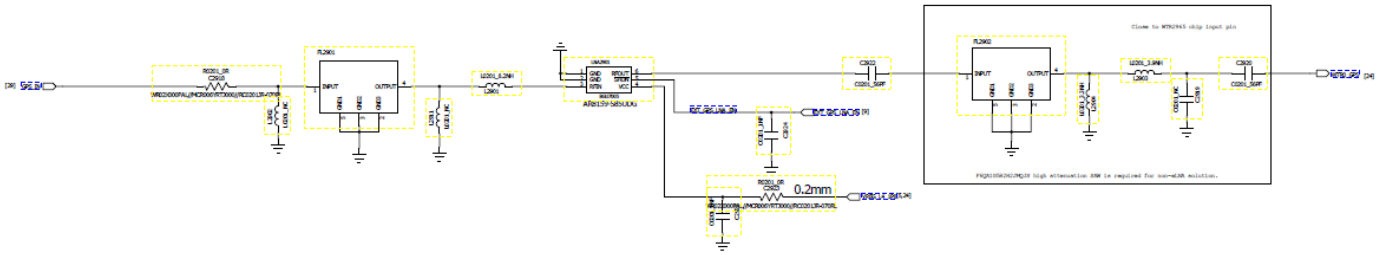
0.2mm

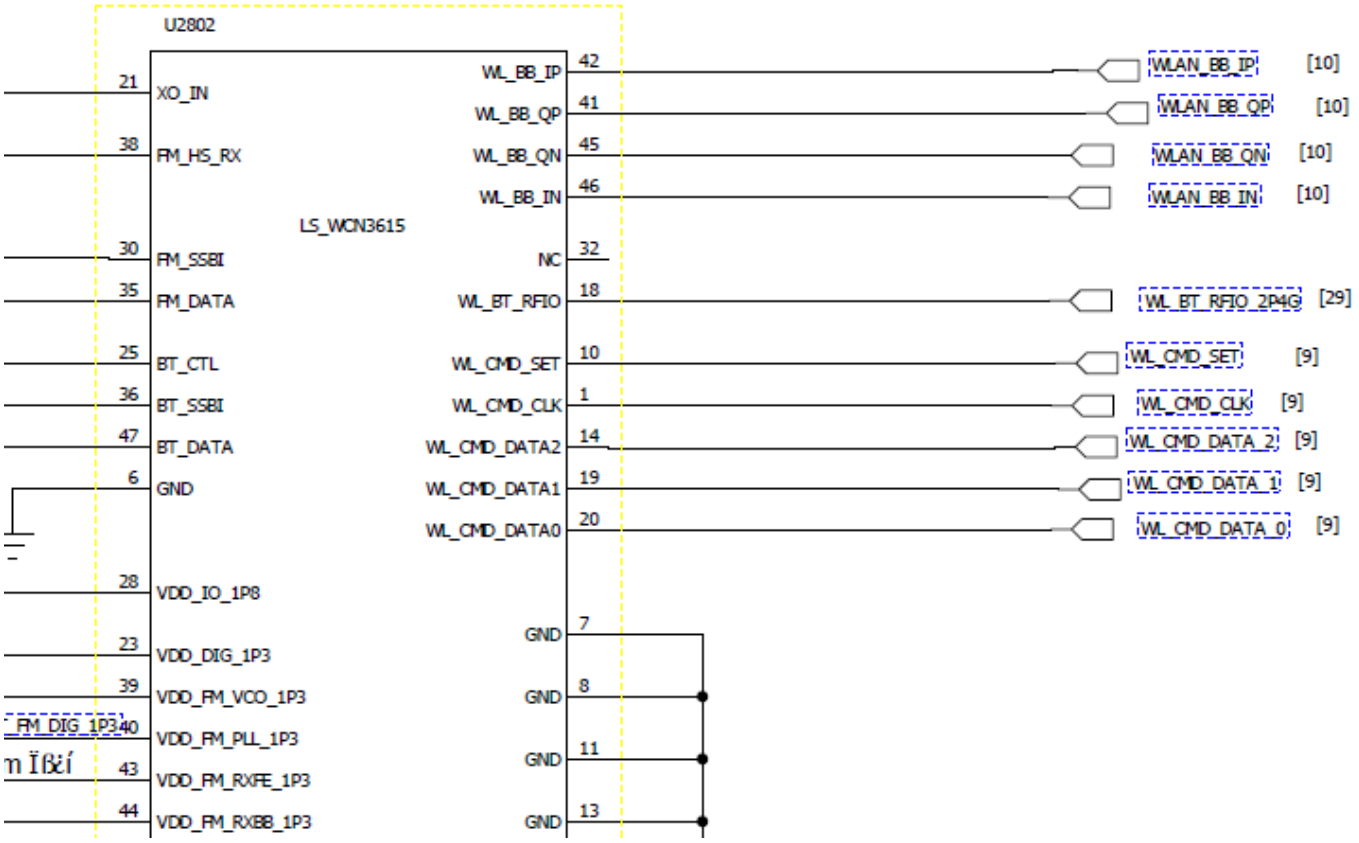
U2802
LS_WCN3615
21 XO_IN
38 FM_HS_RX
30 FM_SSBI
35 FM_DATA
25 BT_CTL
36 BT_SSBI
47 BT_DATA
6 GND
28 VDD_IO_1P8
23 VDD_DIG_1P3
39 VDD_FM_VCO_1P3
FM_DIG_1P3 40 VDD_FM_PLL_1P3
43 VDD_FM_RXFE_1P3
44 VDD_FM_RXBB_1P3
WL_BB_IP 42
WL_BB_QP 41
WL_BB_QN 45
WL_BB_IN 46
NC 32
WL_BT_RFIO 18
WL_CMD_SET 10
WL_CMD_CLK 1
WL_CMD_DATA2 14
WL_CMD_DATA1 19
WL_CMD_DATA0 20
GND 7
GND 8
GND 11
GND 13
WLAN_BB_IP [10]
WLAN_BB_QP [10]
WLAN_BB_QN [10]
WLAN_BB_IN [10]
WL_BT_RFIO_2P4G [29]
WL_CMD_SET [9]
WL_CMD_CLK [9]
WL_CMD_DATA_2 [9]
WL_CMD_DATA_1 [9]
WL_CMD_DATA_0 [9]

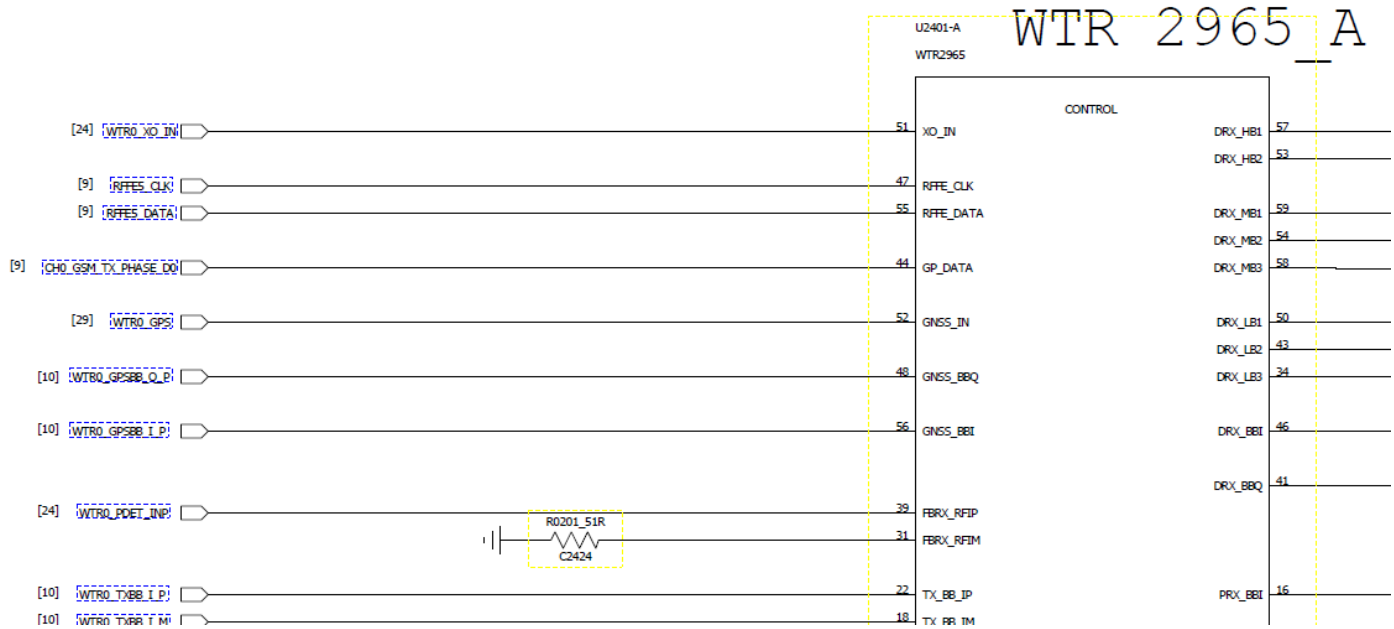

3.2 RF Block Diagram :WIFI/GPS/BT System

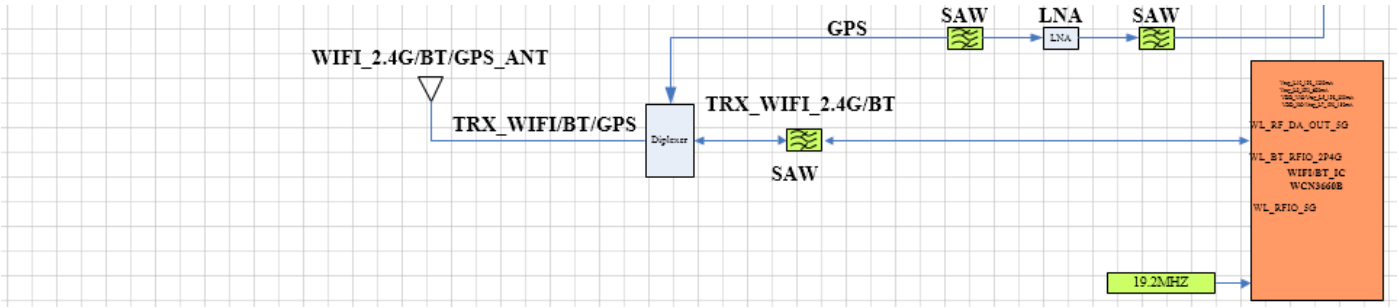

3.3Key Components

Electronic components description and circuit location code:

31	LNA2901	射频 LNA_1.5G
32	FL2904	声表滤波器_2.4G_wifi 滤波器_1109_RX_B8852_EPCOS
33	U2802	射频收发器_WIFI/BT2.4G/FM
34	DU2901	电磁干扰双向阻带滤波器_2450.00/1583.50_单端
35	FL2901	声表面滤波器_GPS BEIDOU_RX1109
36	FL2902	声表面滤波器_GPS BEIDOU_RX1109

`

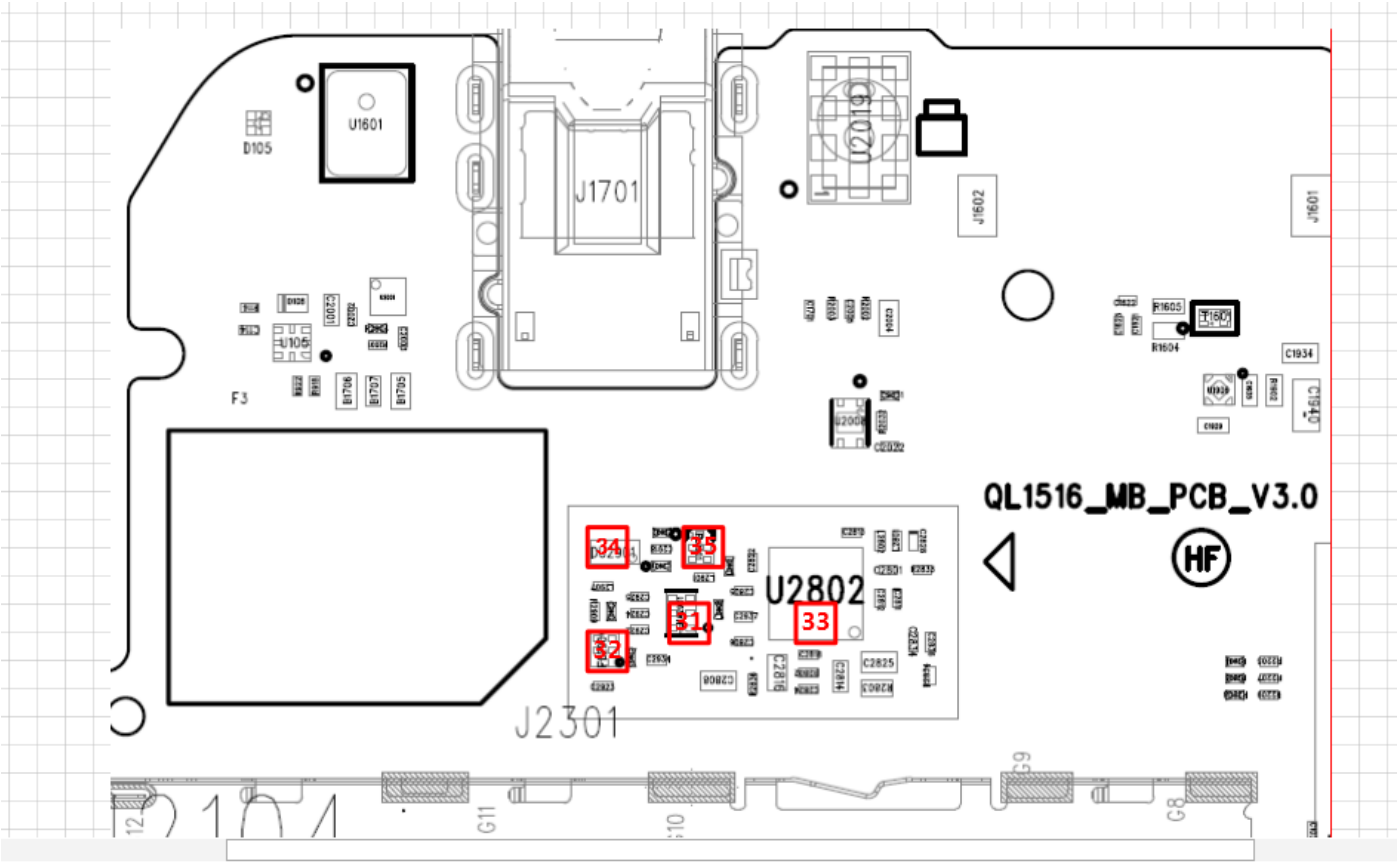
U1601
D105
J1701
U2019
J1602
J1601
F3
U2802
J2301
QL1516_MB_PCB_V3.0
HF
34
35
31
32
33

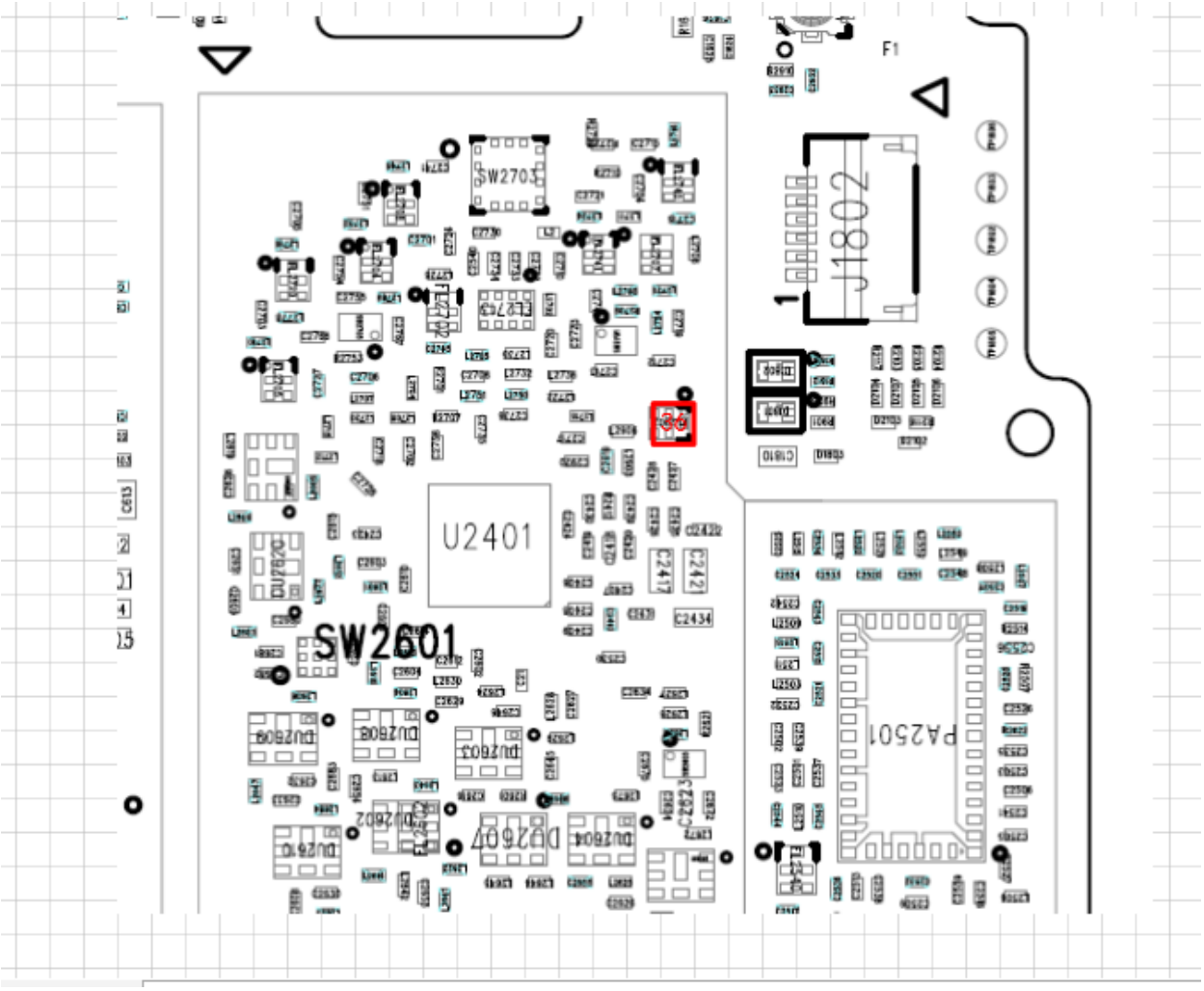
F1
J1802
U2401
SW2601
PA2501
36